EC FAN

UFT60BBPB Series

Size : 60 x 60 x 25
Unit : mm

(Axial Fan)

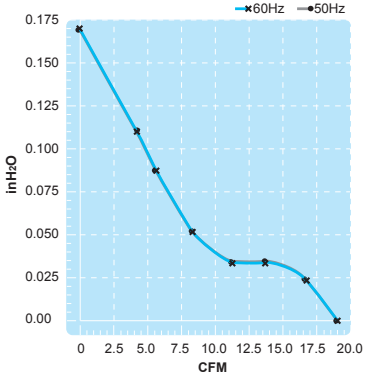

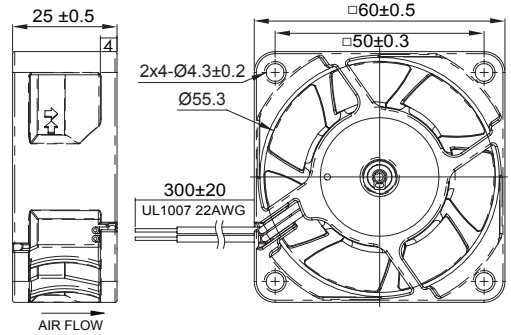

Lead Wire Type

Electronically-Protected

E136370 E136370

Model \ Spec.	Rated Voltage V	Frequency Hz	Input Power W	Rated Current A	Locked Current A	Speed RPM	Maximum Air Flow m^3/min.	Maximum Air Flow CFM	Maximum Pressure mmH_2O	Maximum Pressure $InchH_2O$	Noise dB	Weight kg
UFT60BBPB0AM1D4A	115~230	50/60	2.0 (115V) 2.4 (230V)	0.041 (115V) 0.026 (230V)	0.092 (115V) 0.044 (230V)	3850 (115V) 3950 (230V)	0.54 (115V) 0.55 (230V)	19.1 (115V) 19.4 (230V)	4.3 (115V) 4.6 (230V)	0.17 (115V) 0.18 (230V)	31	0.06